GP-11
TECHNICAL DATA

DIMENSIONS TO
ISO 5211 - DIN 3337
AND NAMUR VDI/VDE 3845

DIMENSIONS IN INCHES

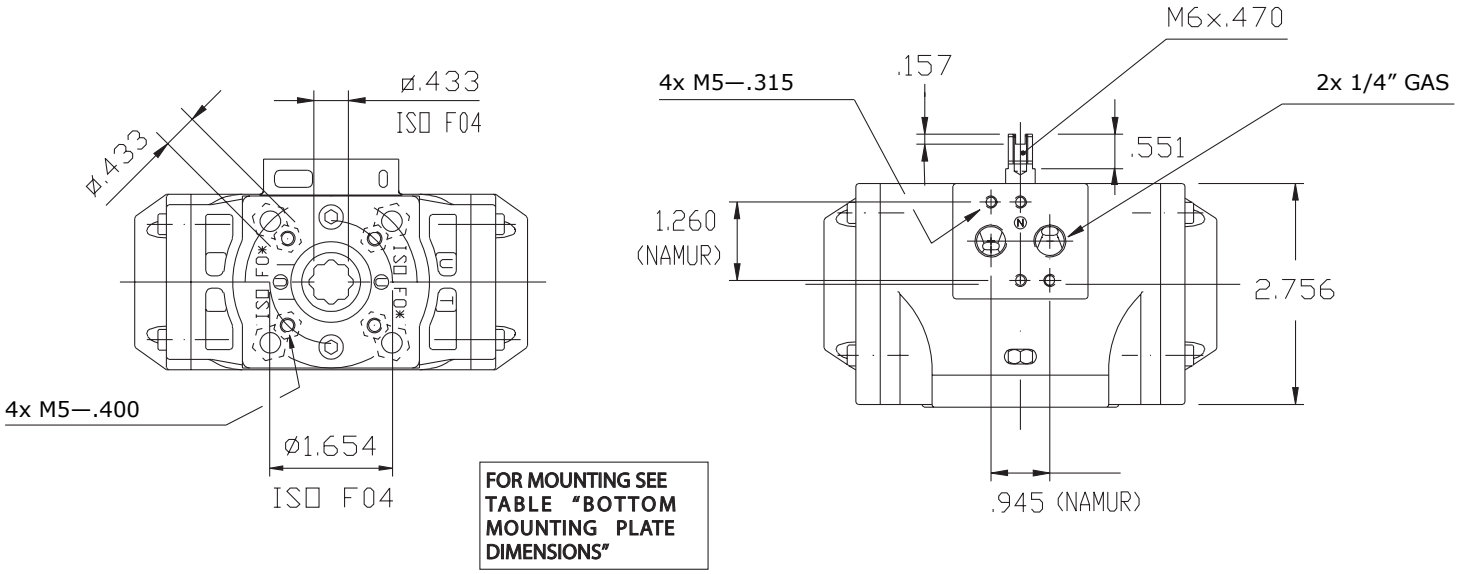

FOR MOUNTING SEE TABLE "BOTTOM MOUNTING PLATE DIMENSIONS"

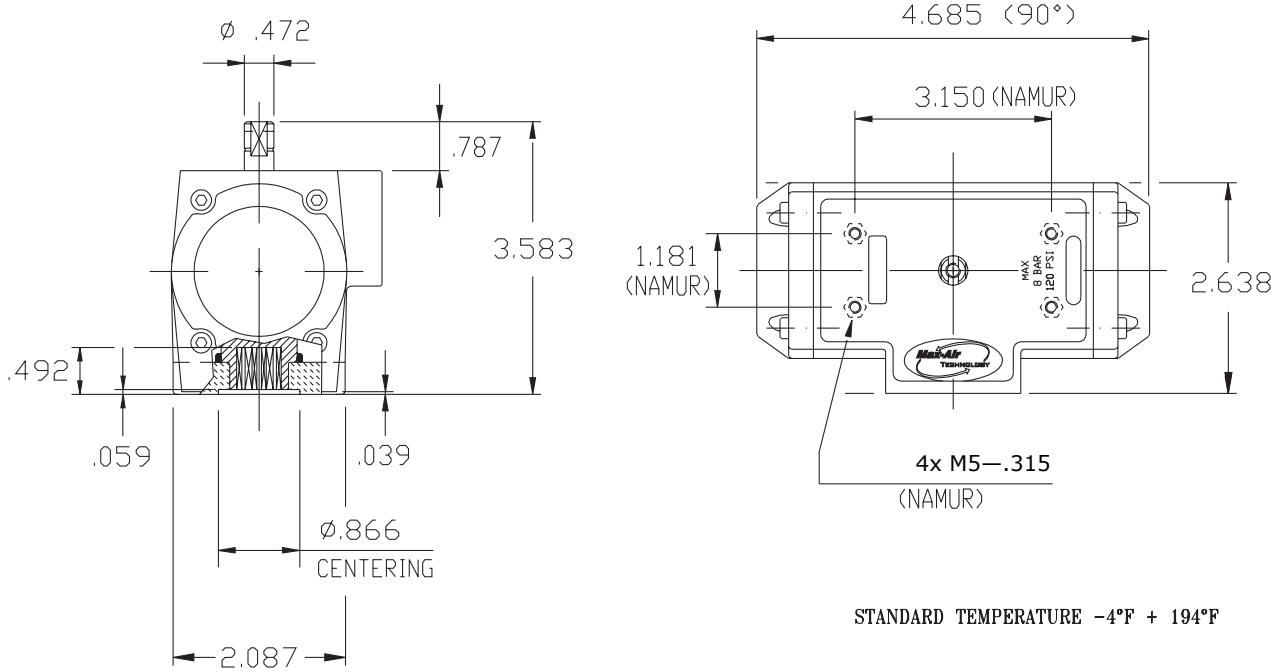

STANDARD TEMPERATURE -4°F + 194°F

WEIGHT IN L.B.		AIR CONSUMPTION IN CU. IN.	
D.A.	S.R.	D.A.	S.R.
1.15	1.34(3+3)	13.5	8.0 (3+3)

Max-Air TECHNOLOGY INC.
751 Hoff Road - O'Fallon, Missouri 63366 U.S.A.
www.max-airtechnology.com sales@max-airtechnology.com